BLINK

URINAL

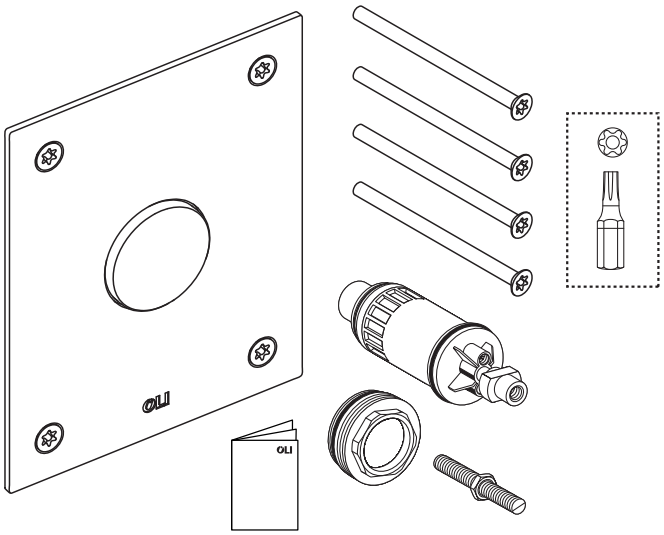

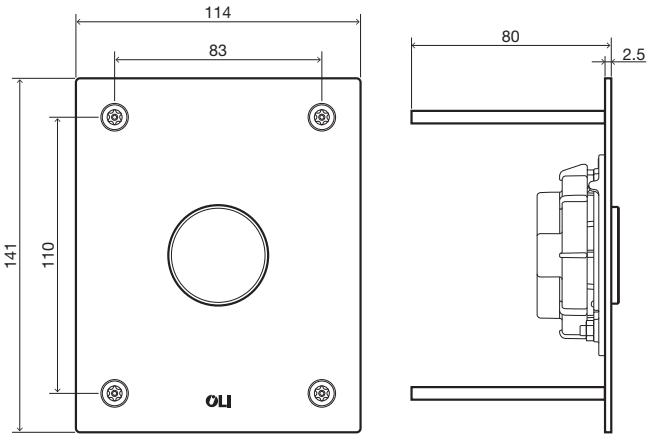

(dimensions in millimeters)

1

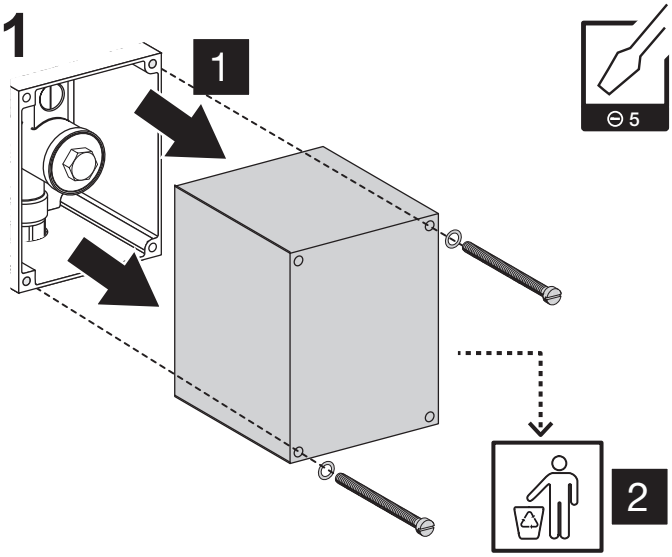

2

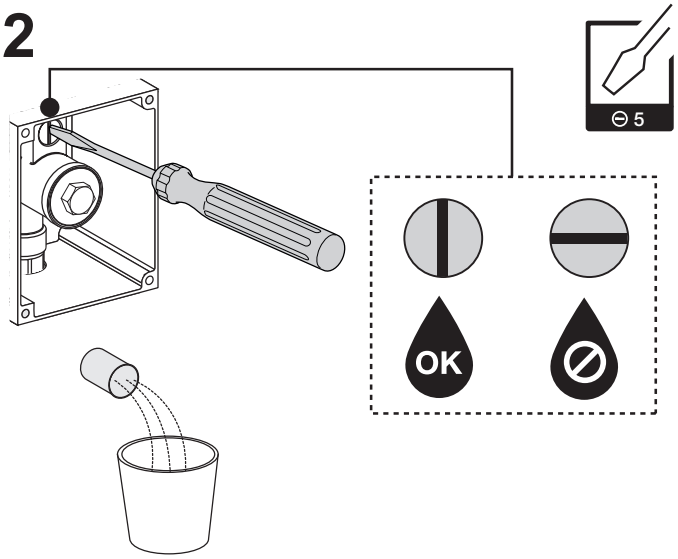

3

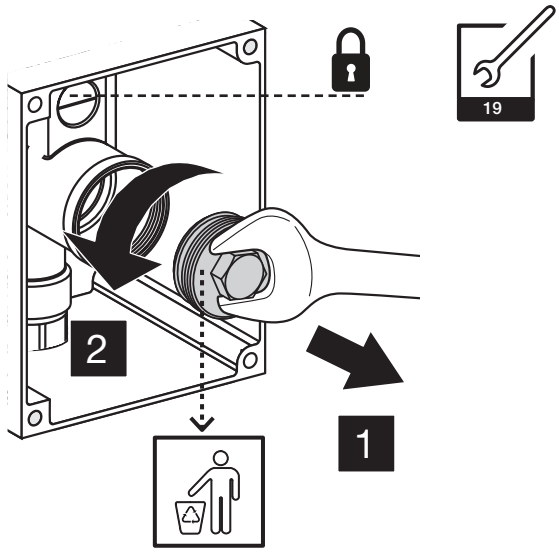

4

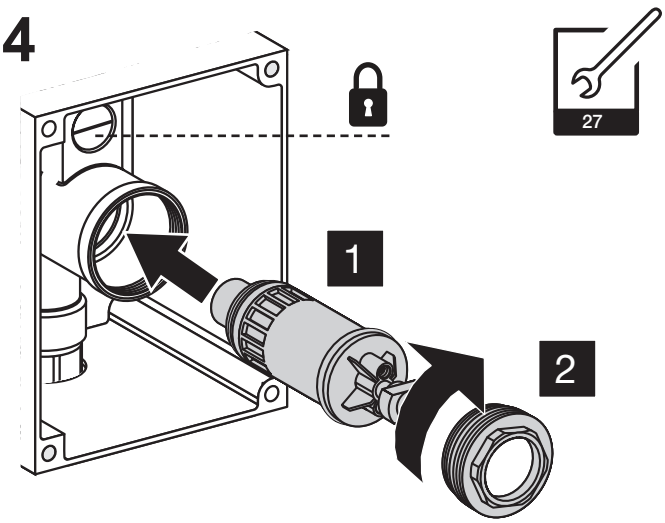

www.oli-world.com

comercial@oli-world.com | info@olisrl.it

AC10000882872.1

6

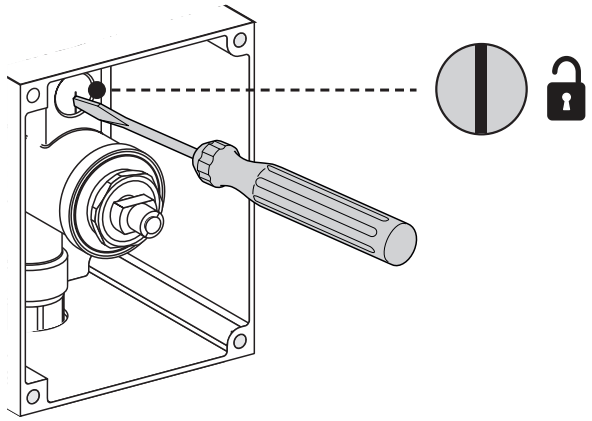

7

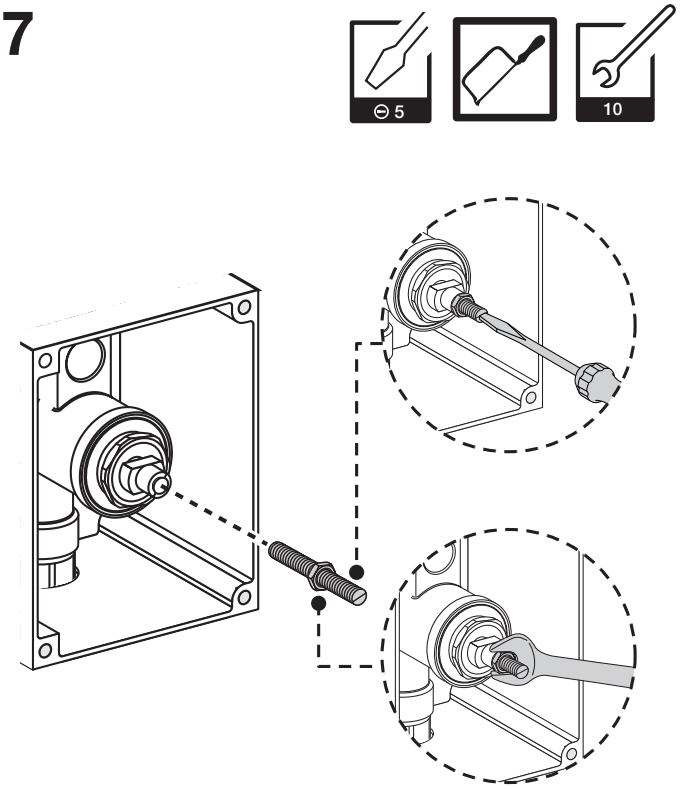

8

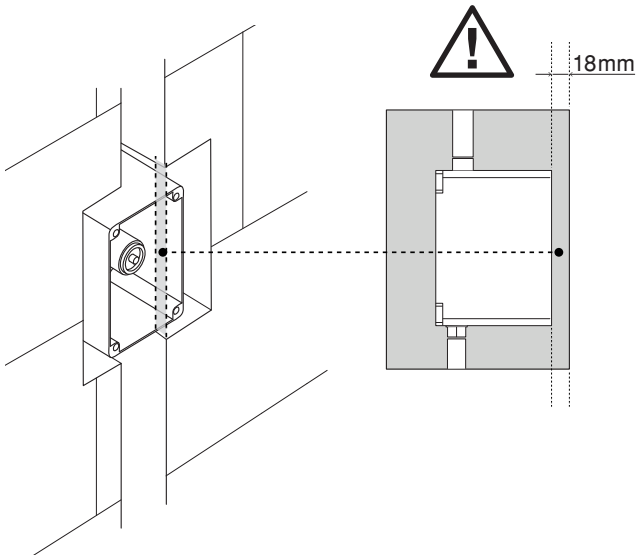

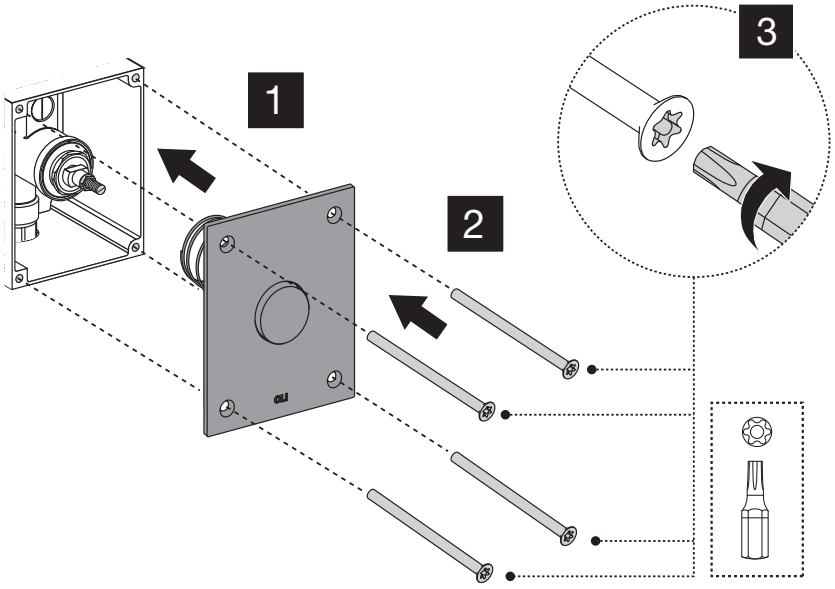

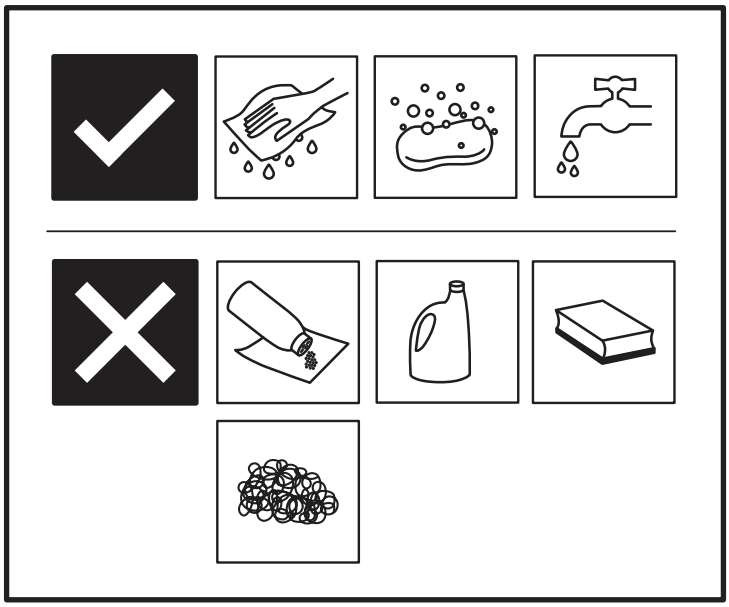

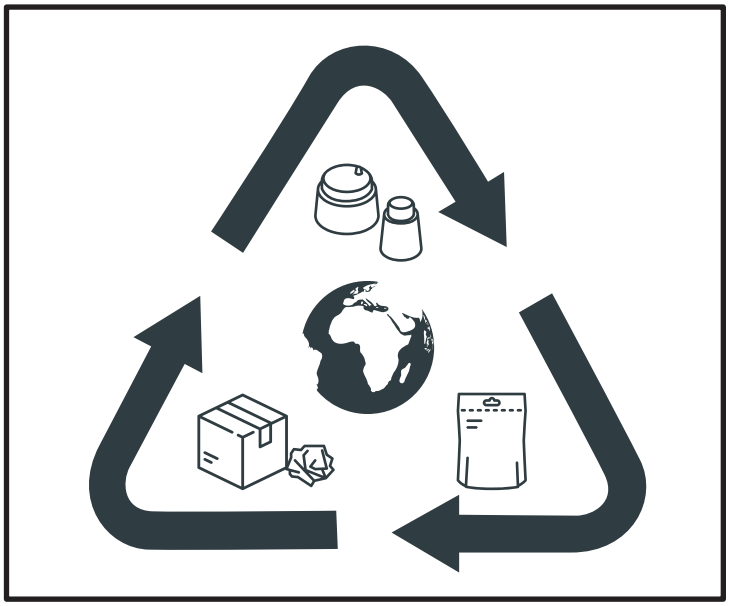

www.oli-world.com

comercial@oli-world.com | info@olisrl.it