AZOR PLUS

INFERIOR INLET VALVE

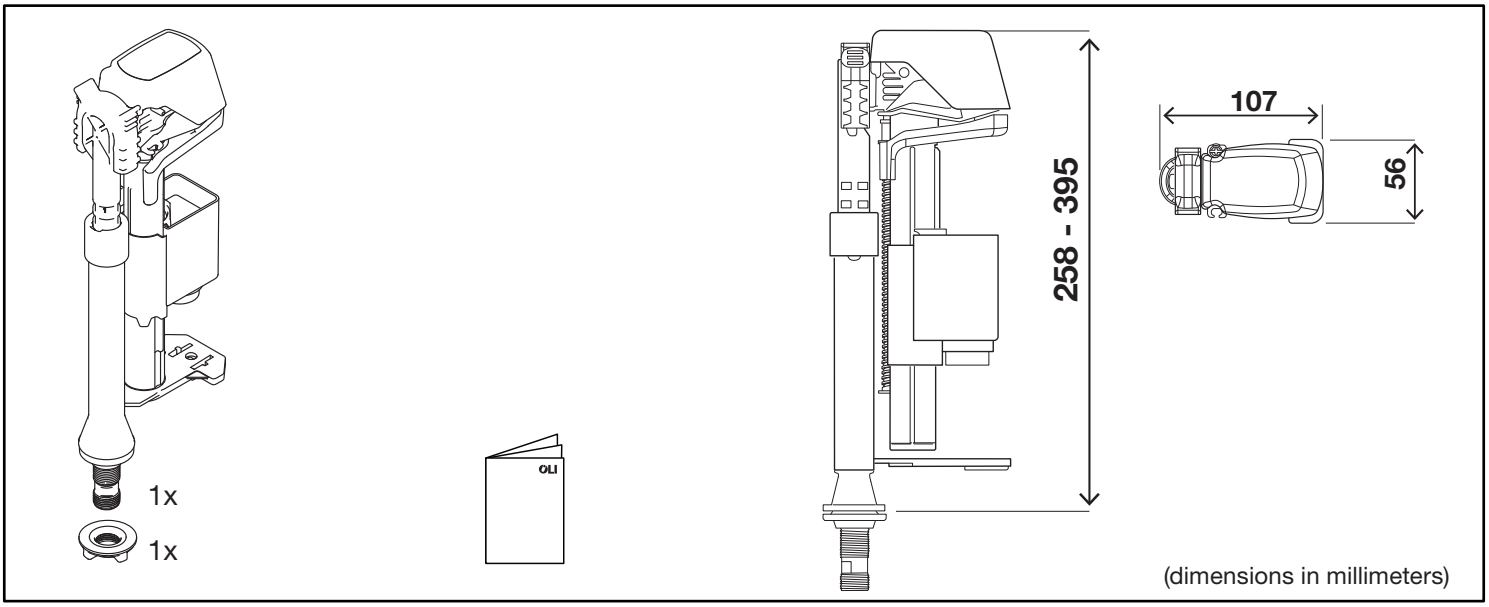

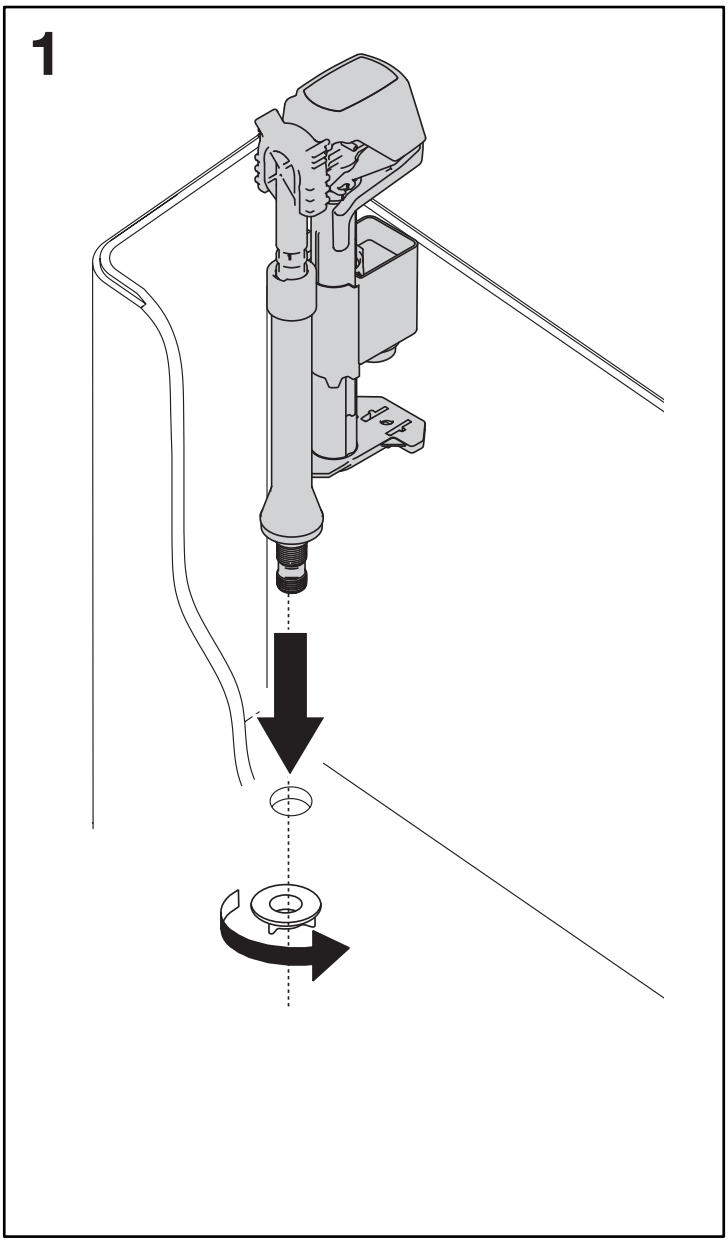

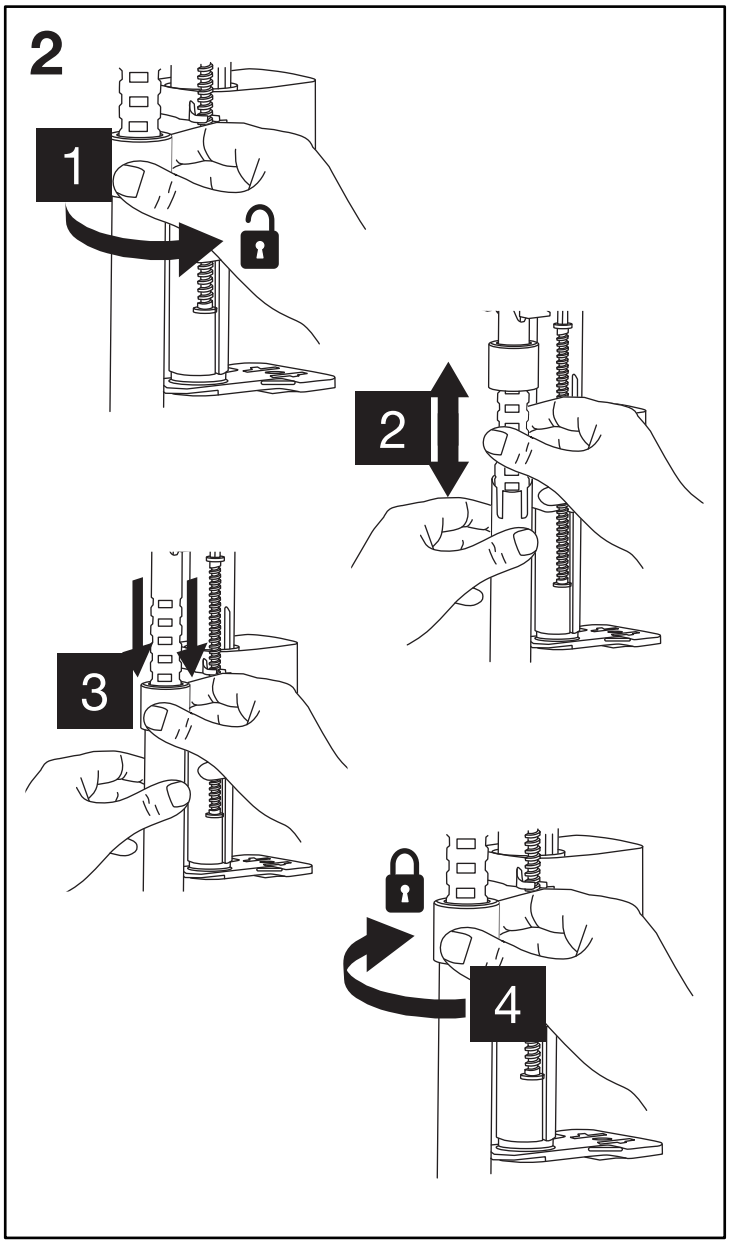

www.oli-world.com

comercial@oli-world.com | info@olisrl.i

AC10000166327.3

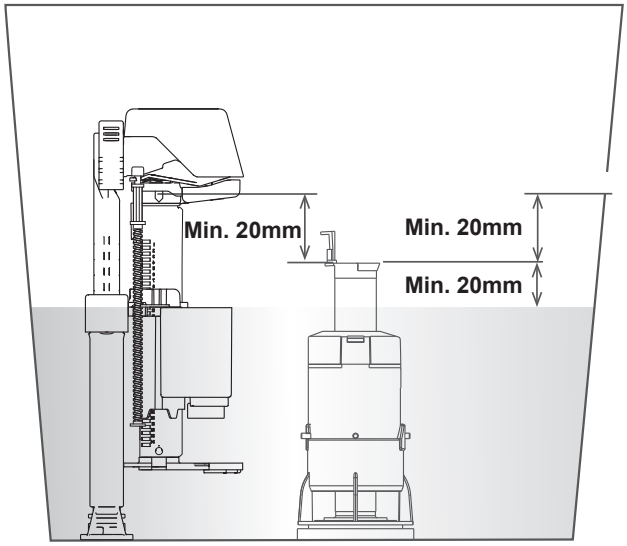
Min. 20mm
Min. 20mm
Min. 20mm

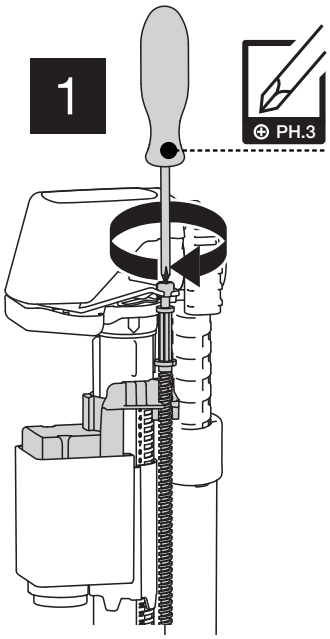
1
PH.3

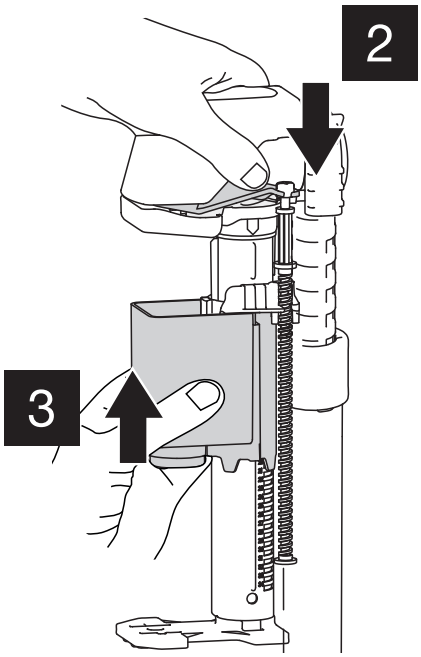
2
3

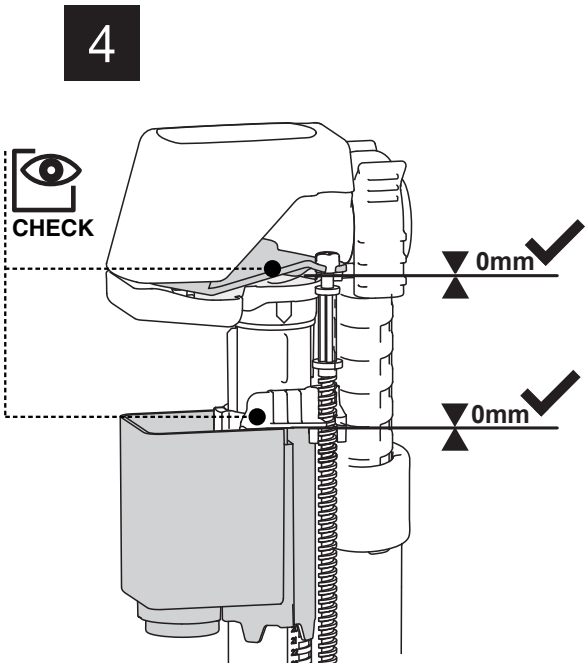
4
CHECK
0mm
0mm

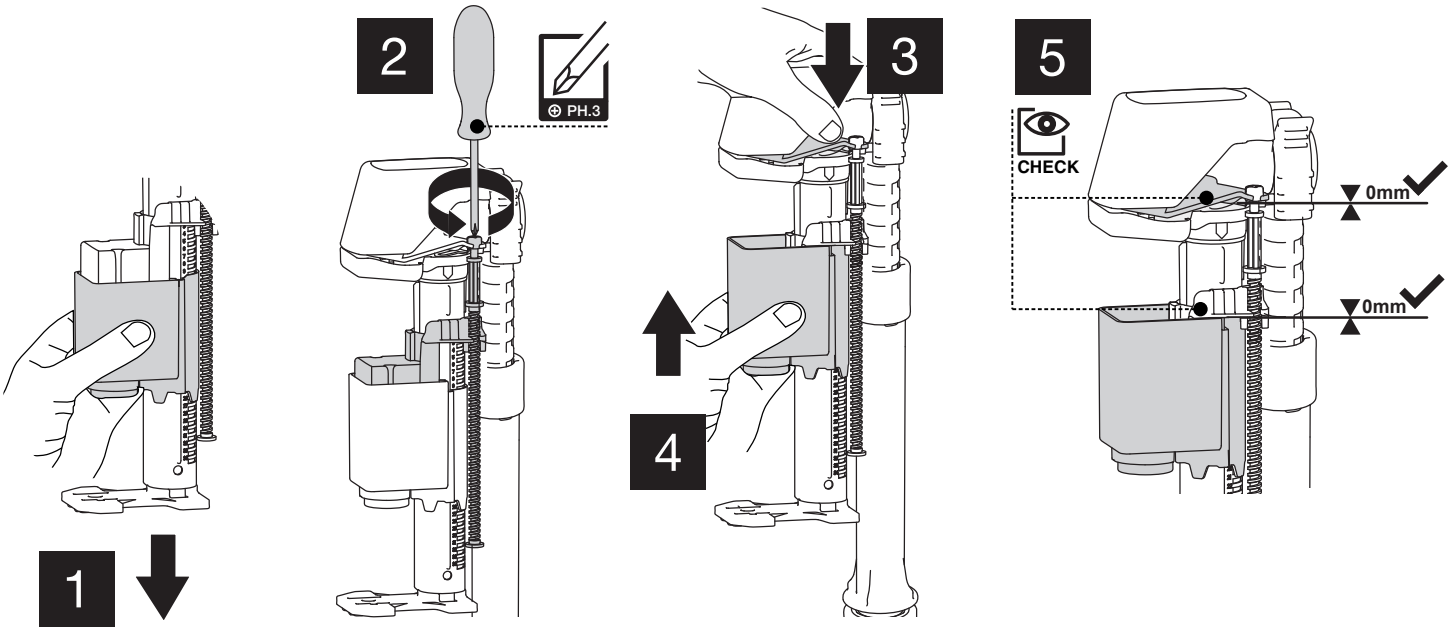
1
2
PH.3
3
4
5
CHECK
0mm
0mm

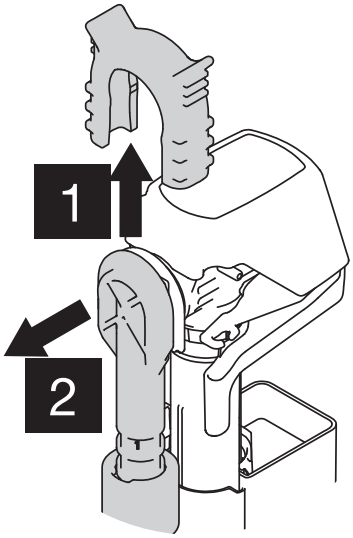
1
2

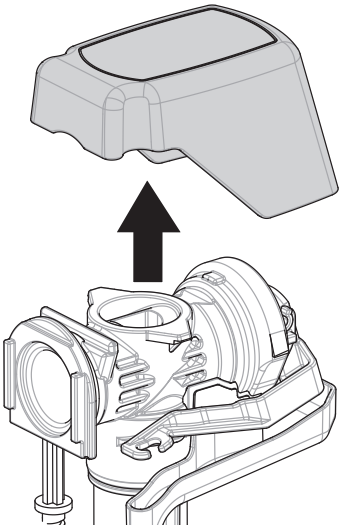

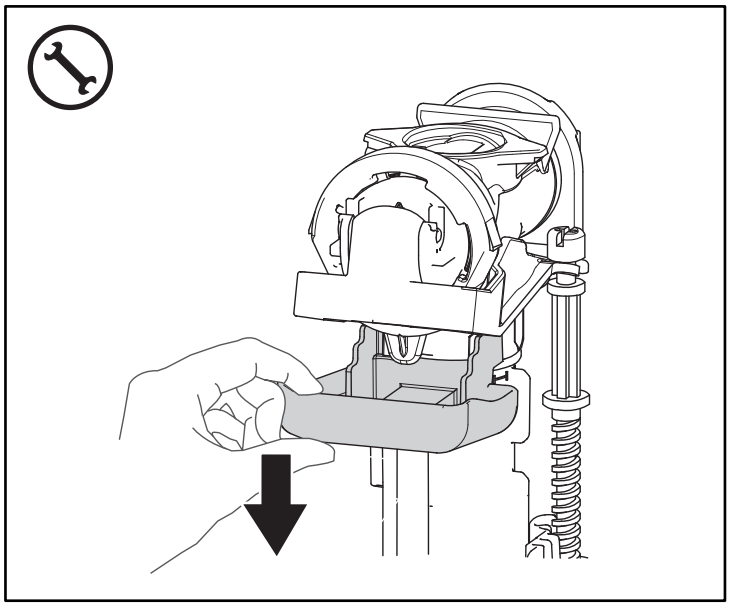

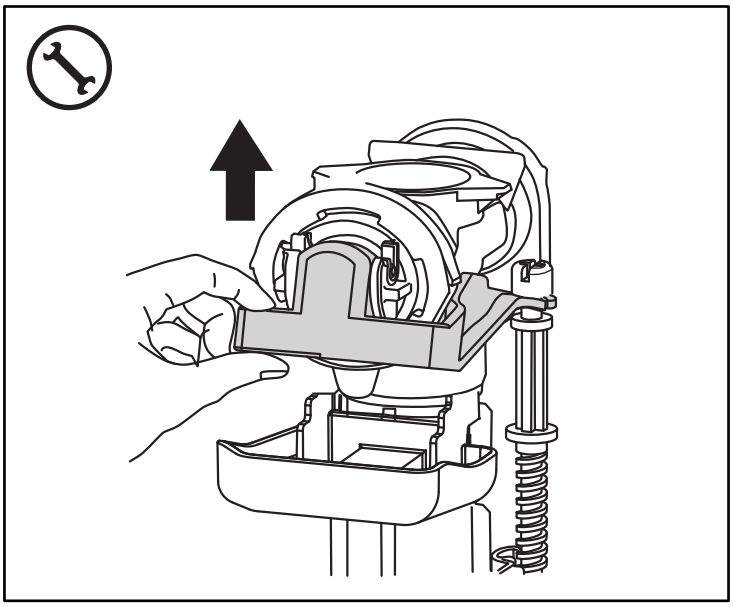

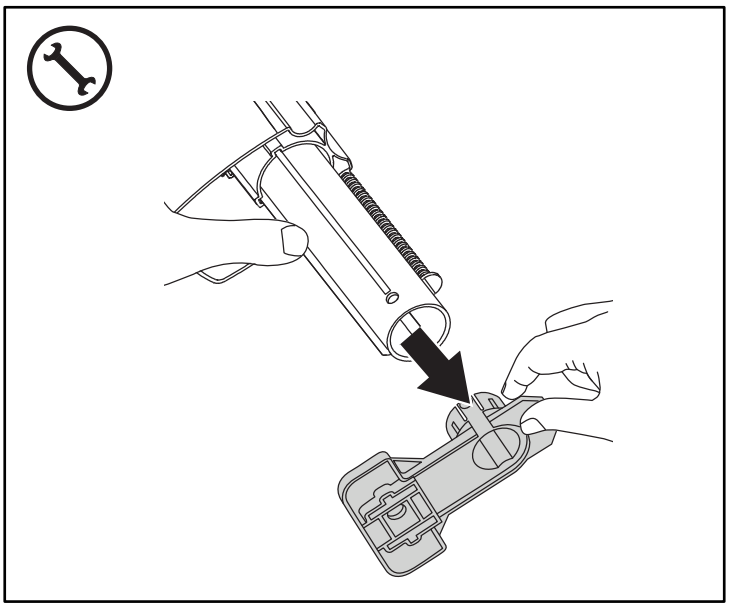

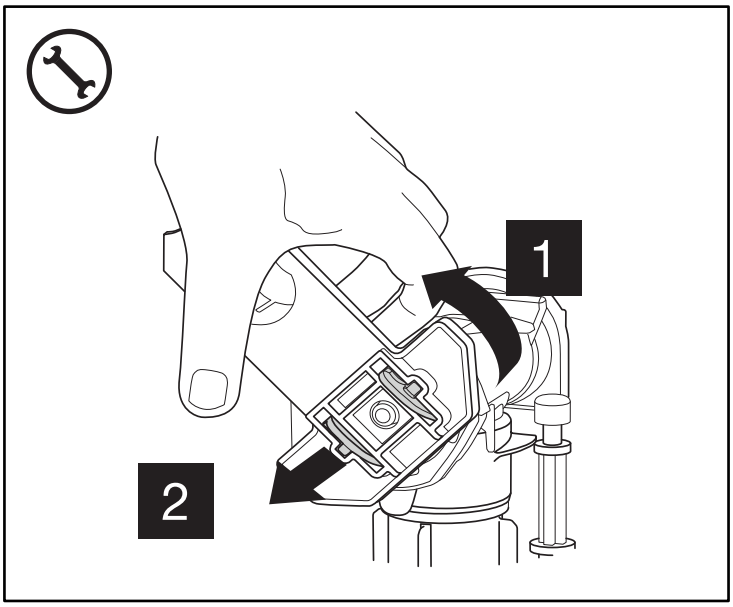

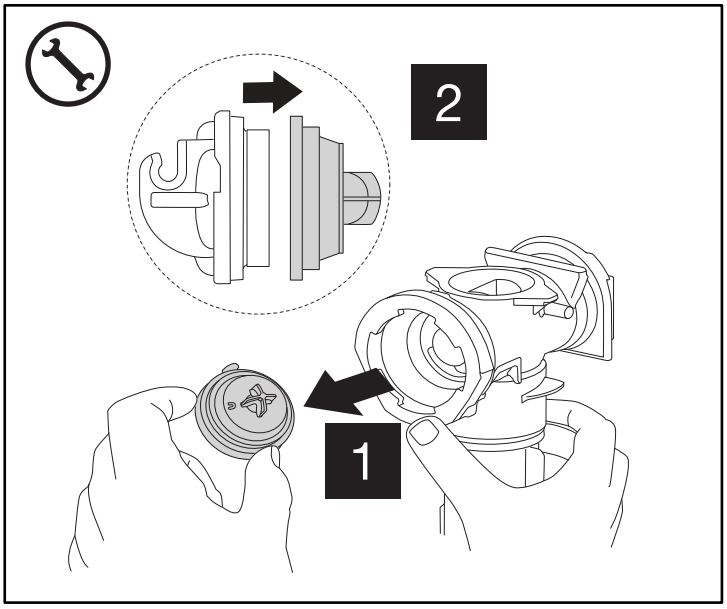

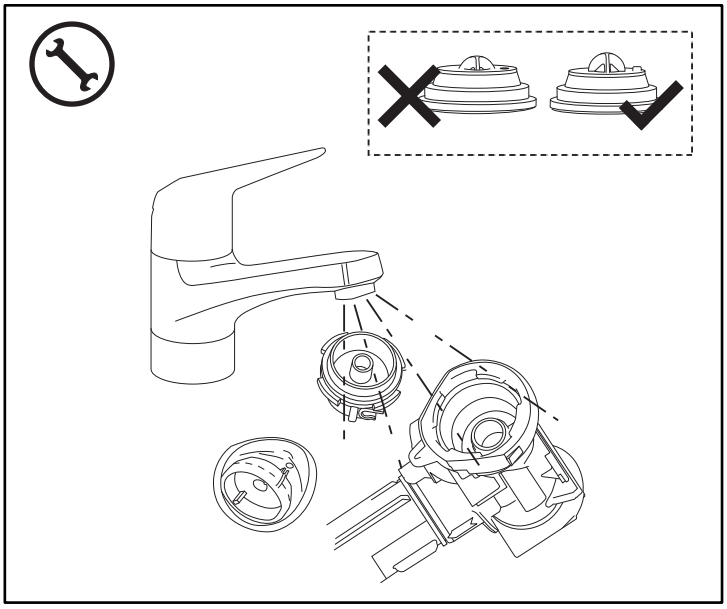

www.oli-world.com

comercial@oli-world.com | info@olisrl.it