PUSH BUTTON

In-wall pneumatic

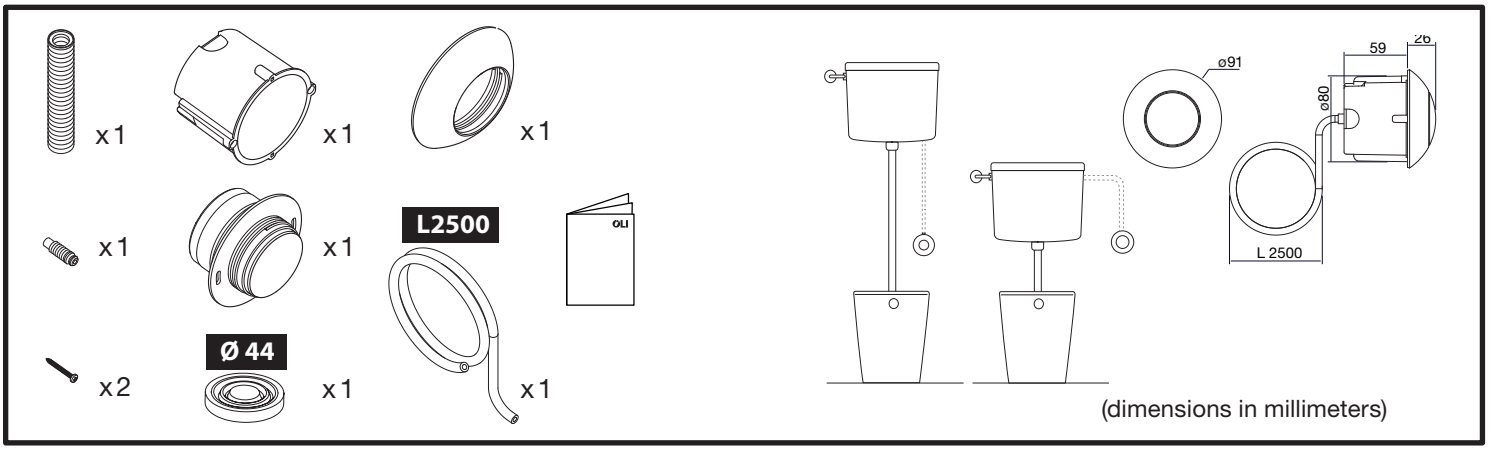

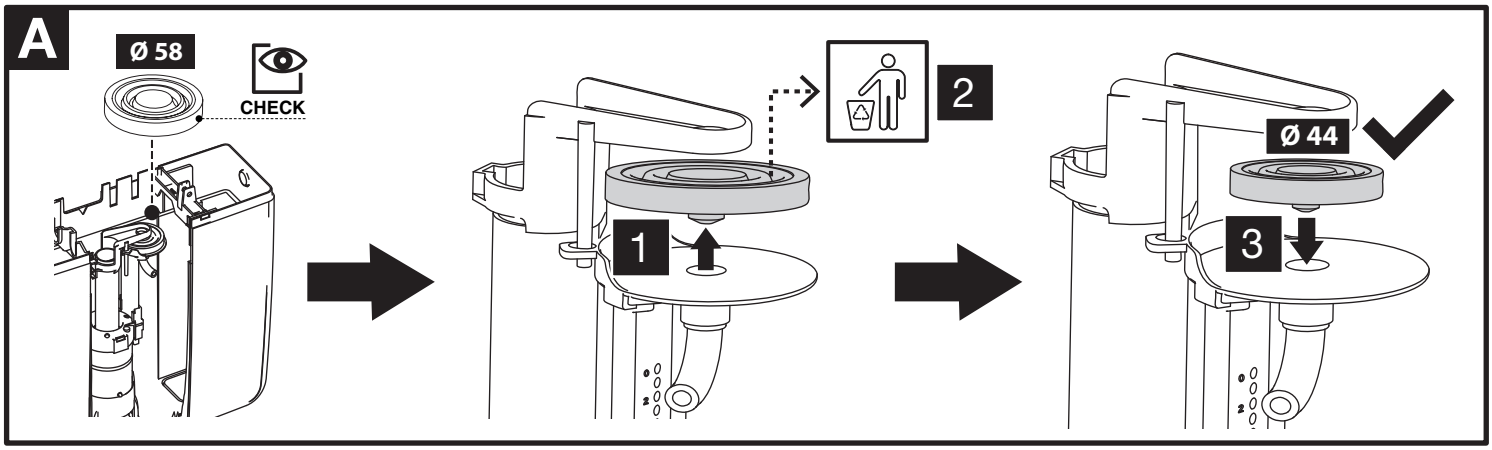

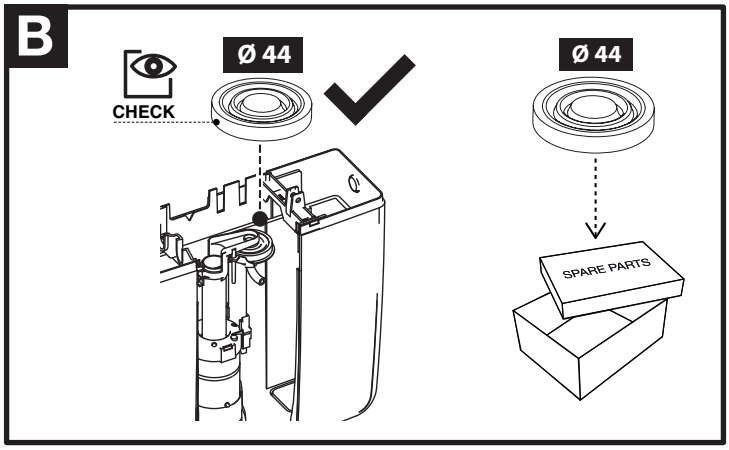

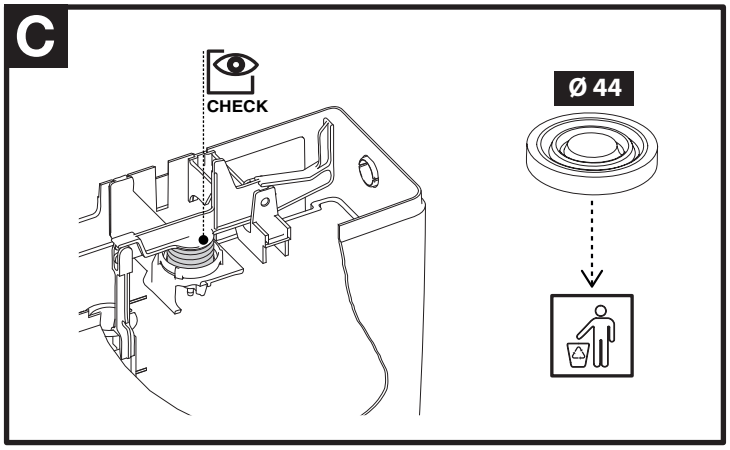

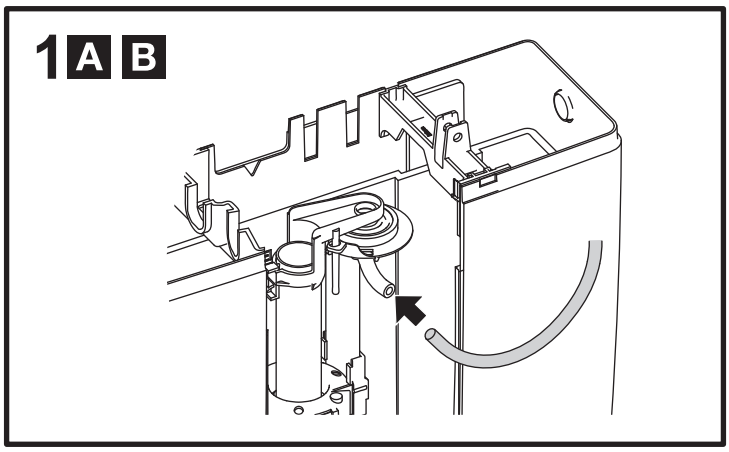

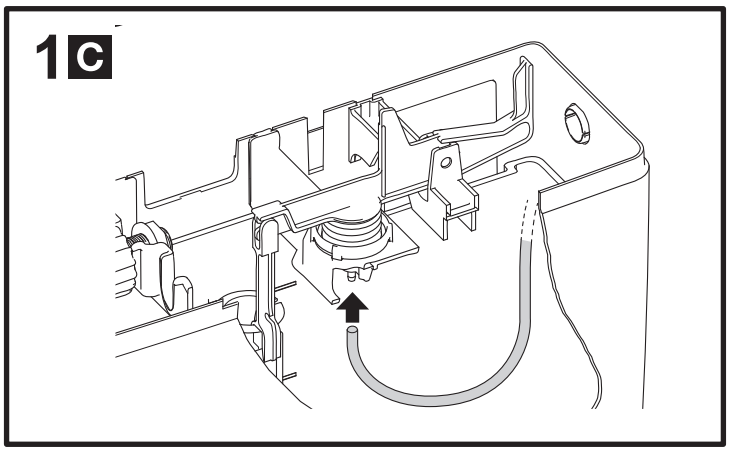

comercial@oli.pt | www.oli.pt

info@olisrl.it | www.olisrl.it

AC10000087295.0

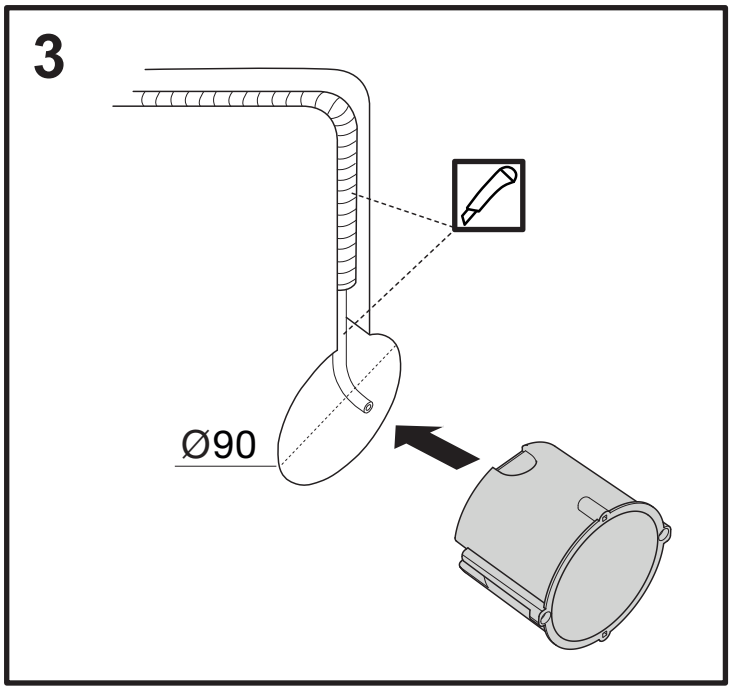

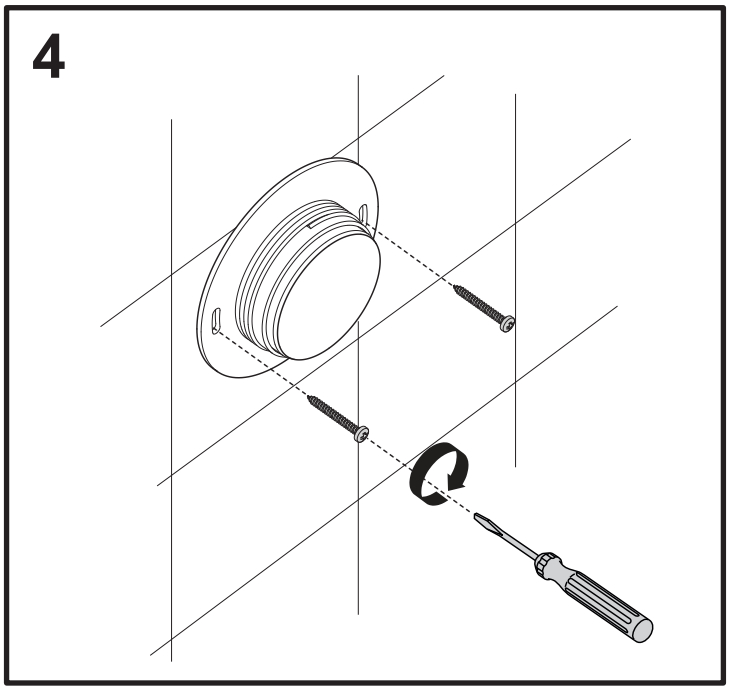

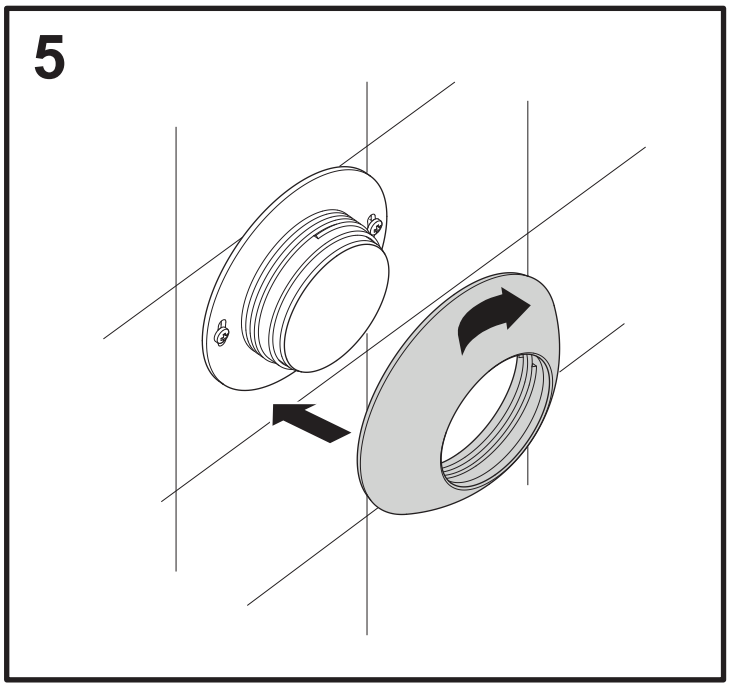

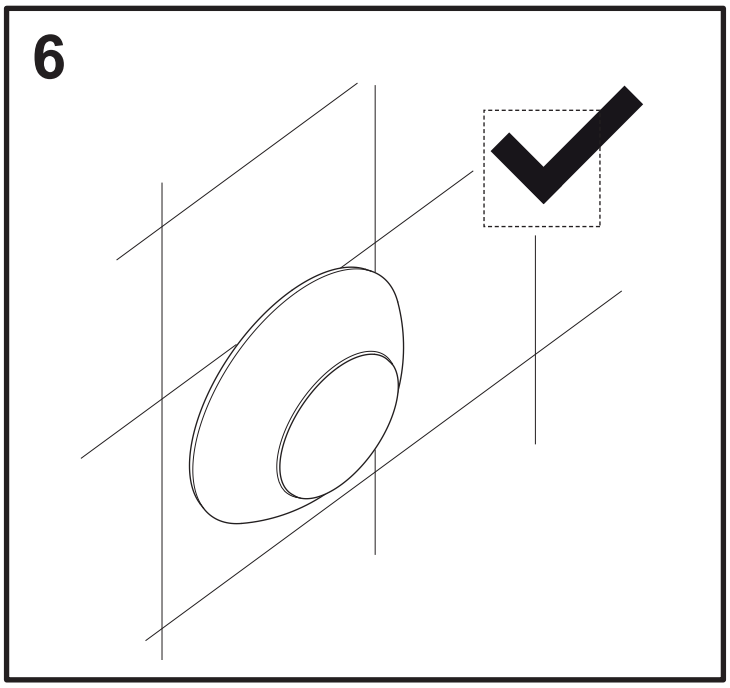

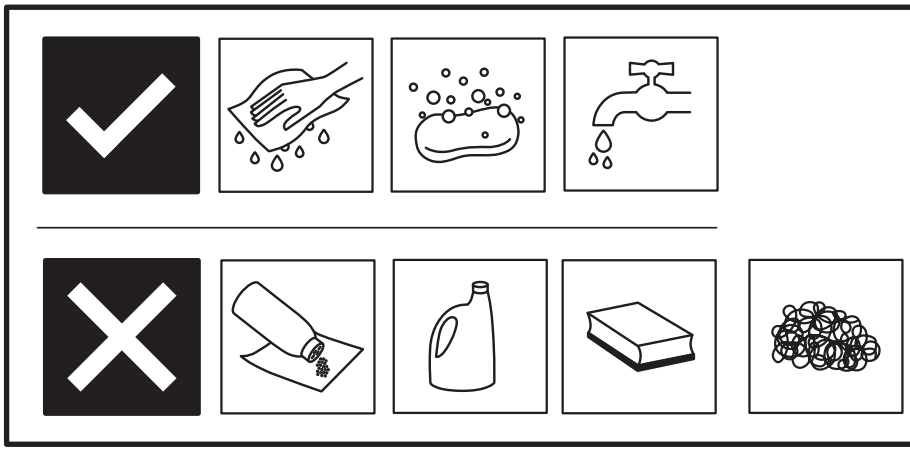

comercial@oli.pt | www.oli.pt

info@olisrl.it | www.olisrl.it