KIT OLIPURE

WC pan sanitiser

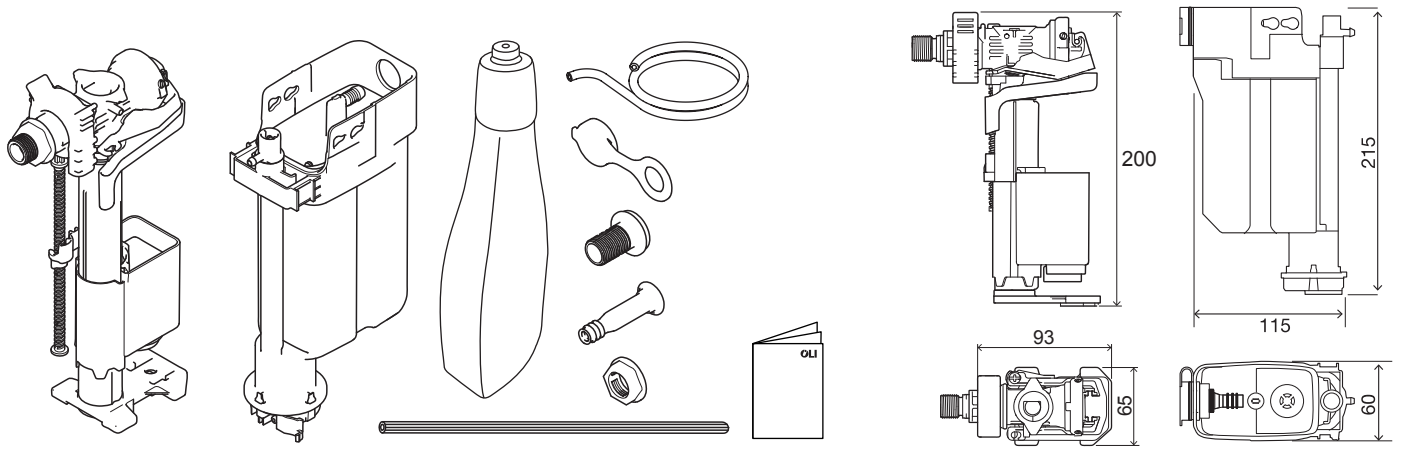

(dimensions in millimeters)

1

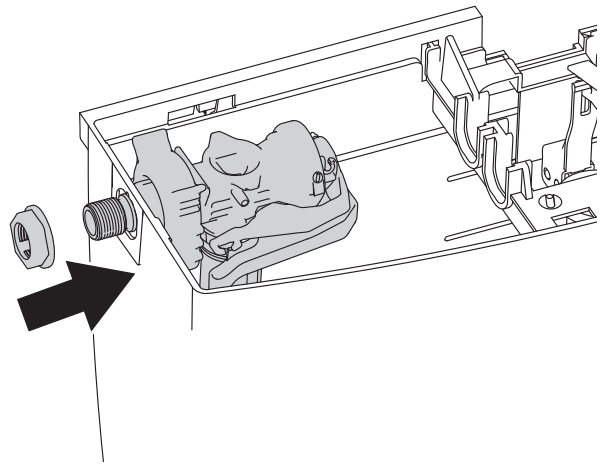

2

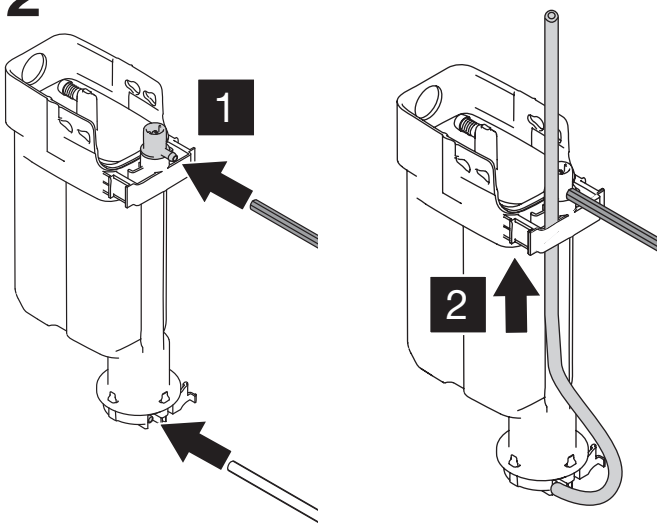

3

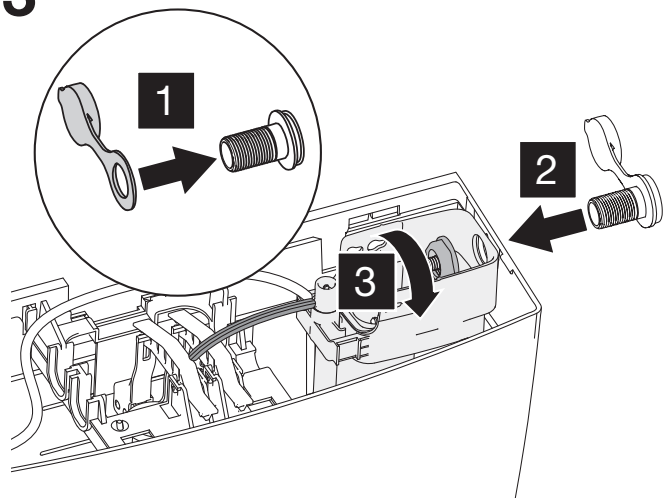

4

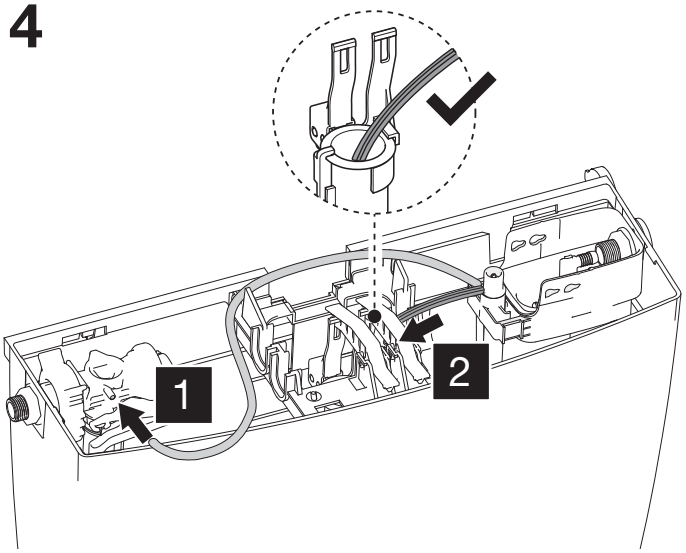

www.oli-world.com

comercial@oli-world.com | info@olisrl.it

AC10000155376.0

5

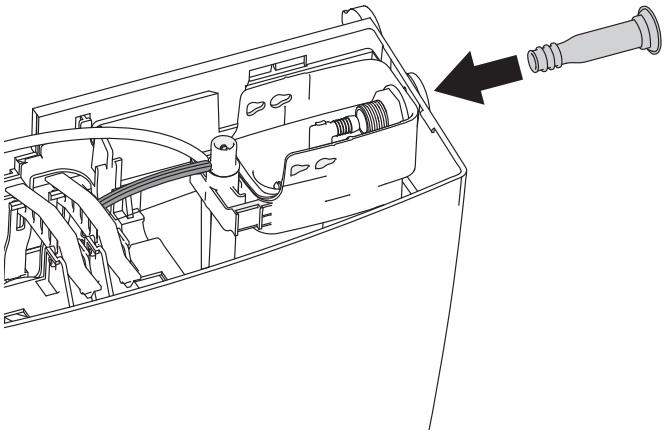

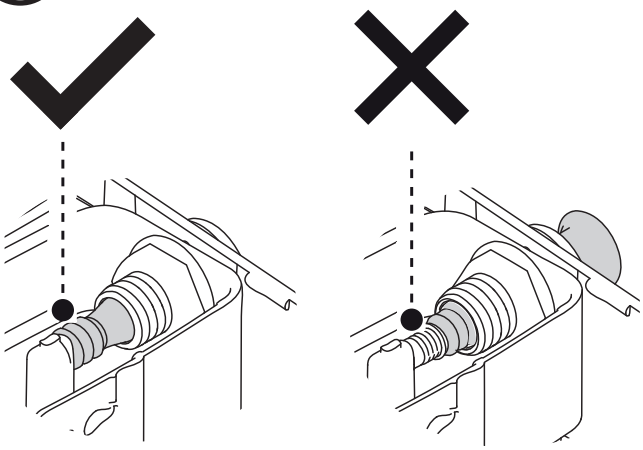

7

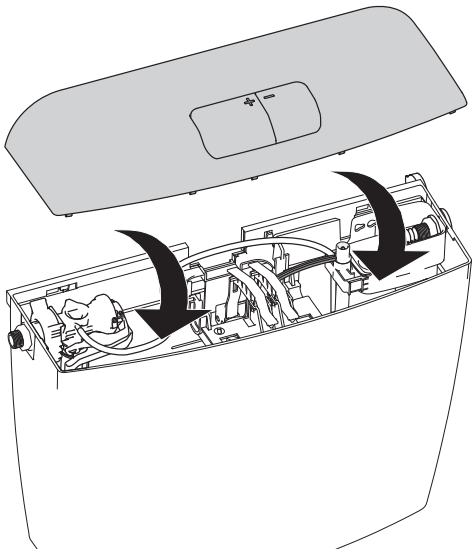

8

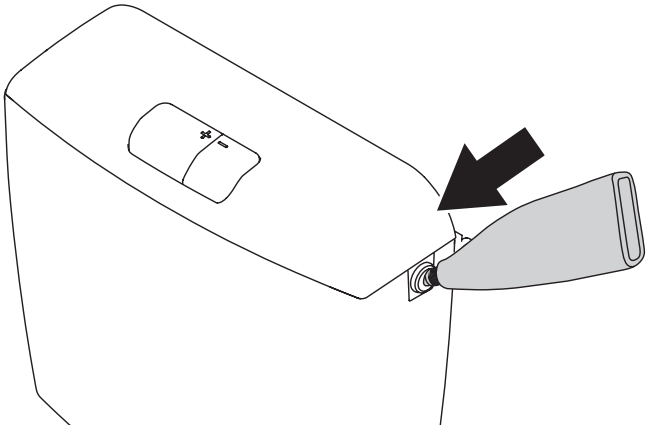

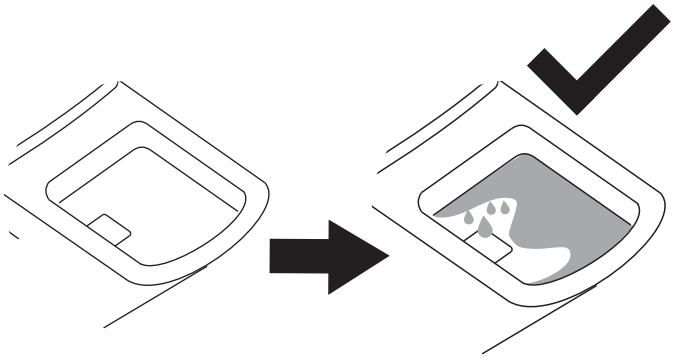

9

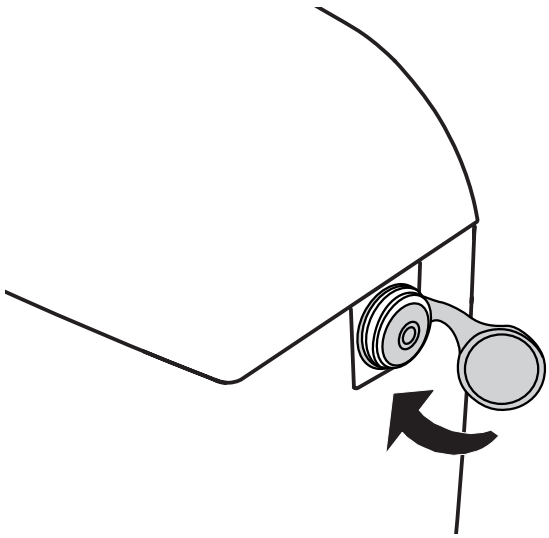

www.oli-world.com

comercial@oli-world.com | info@olisrl.it